ISSN 2395-1621

Intelligent Heat Box

#1MAITHILI DHULE, #2VAISHNAVI DESHMUKH

1dhulemaithili@gmail.com
2deshmukhvaishnavi25@gmail.com

#12Electronics and Telecommunication

Sinhgad College of Engineering, Pune.

ABSTRACT

This paper presents a control system that has been designed to regulate the temperature of food items kept inside a closed system. The system has been designed with the help of the Atmega328p microcontroller. The LM35 temperature sensor is used to continuously monitor the temperature of the closed container in which food has been kept. The temperature is displayed via a 16x2 LCD. A 60W light bulb is used as a heating element, which keeps the food item warm. When the temperature is above a certain set point, the bulb turns off, and heating is temporarily suspended. Once the temperature decreases below the set point, the relay becomes activate and heating of the food item commences. The programming has been done using the Arduino IDE.

Keywords— Control System, temperature, food, Atmega328p, LM35, heating, light bulb, Arduino IDE

ARTICLE INFO

Article History

Received: 20th November 2017

Received in revised form :

20th November 2017

Accepted: 25st November 2017

Published online :

29th November 2017

I. INTRODUCTION

When cooked, hot food is kept outside on the counter, it tends to get cold after a while. Sometimes, it is required to store it at a particular temperature before eating it, so that it doesn't go bad. Refrigerators exist for the purpose of keeping the food cool and fresh. An appliance to do just the opposite, that is, to maintain the warm temperature of the food has been devised. This device, which we call the "Intelligent Heat Box", is an automatic heat control system that controls the temperature of food to keep it hot and fresh.

Temperature control of food is vital in food industries. For example, in bakeries, where flour based goods such as bread, cookies and pastries are produced, the food items need to be stored in a hot environment so that they remain fresh for consumption.

In other food industries, processes such as cooking, storing and freezing require setting of proper hotness and coldness of the food in order to maintain their quality. In many cases, regulation of temperature of hot perishable goods differs from that of cold ones. Goods that are purchased cold must be kept inside a freezer immediately. Freshly cooked food cannot be kept in the refrigerator right away; it should be cooled first [4].

Other areas in which temperature control plays an important role include poultry farms for proper hatching of eggs, blood banks, and industries in which it is essential to prevent the material inside the oven or furnace from spoiling due to temperature variation [1].

II. BACKGROUND

Microcontrollers are gaining popularity day by day, being used in various embedded applications. In essence, a microcontroller is an IC which takes in data as input, processes it, and gives an output signal which can be used to control different devices by controlling physical parameters such as pressure, temperature, humidity, etc. Almost every electronic gadget or machine that exists today makes use of a microcontroller. Examples include home appliances such as washing machines, microwave ovens, and coffee makers, entertainment systems, and automobile systems such as for the purpose of controlling air-bags and automatic car locks. In this system, one such microcontroller, i.e. Atmega328p has been utilized to monitor and control temperature of food kept in a container.

Arduino is an open-source electronics platform which is based on hardware and software that is quite simple to use. It has a worldwide community dedicated to making Arduino based projects, which includes professionals and hobbyists alike. The immense contribution made it increases the pool of knowledge related to Arduino. It also makes it quite easy for one to find resources related to it and hence project ideas can be easily obtained. It has a language that can be

expanded with the help of various C++ libraries [3]. In this work, a circuit that operates just like an Arduino board has been designed with the help of individual components.

III. SYSTEM DESCRIPTION

The block diagram of the system has been shown in the figure. The temperature sensor LM35, Relay Module (used as a switching device), and a 16x2 LCD display are interfaced to the Atmega328p microcontroller.

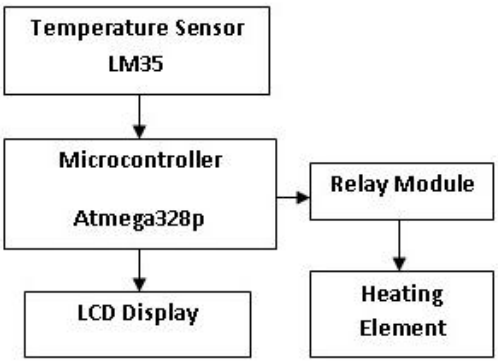

Fig. 1. Block Diagram

Temperature of the system is read by LM35 and sent as a voltage value to Atmega328p. The microcontroller reads this value with the help of a built in, 10 bit ADC. Microcontroller sends output to LCD Display and simultaneously it also activates the relay when a certain condition is true, i.e., when the temperature of the system goes below 40˚ C. At this point, the Relay turns on the heating element.

Atmega328p

The Atmega328p is an 8 bit, 28 pin microcontroller belonging to the AVR family. It has 23 digital input/output pins and 6 analog inputs. Six of the input/output pins can be used as PWM outputs. It has a RISC based architecture with 131 powerful instructions, most of which execute in a single clock cycle. Additionally, it has 32 Kbytes of In-system self-programmable Flash program memory, 1 Kbytes EEPROM and 2Kbytes Internal SRAM [6].

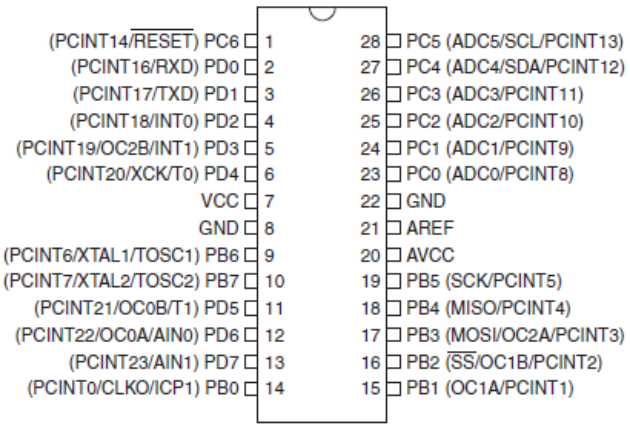

Fig.2. Pin Diagram of Atmega328p

LM35 Temperature Sensor

The LM35 series are precision integrated-circuit temperature sensors, whose output voltage is linearly proportional to the temperature in Celsius. Unlike linear temperature sensors which are calibrated in Kelvin, the LM35 does not require the user to subtract a large constant voltage from its output to obtain the equivalent Celsius temperature. It has typical accuracies of ±1⁄4˚C at room temperature and ±3⁄4˚Cover a full −55 to +150˚C temperature range [7].

16x2 LCD

LCD is an electronic display module. We have used 16x2 LCD in our project, that is, one which can display 16 characters per line, and there being 2 lines. It has two registers, namely, command and data registers. The command register stores instructions given to LCD. The data register stores the data to be displayed on the LCD [5].

Relay

A relay is a simple electromechanical switch that is made up of an electromagnet and a set of contacts. We have used a relay module in our system.

Programming

In our work, we have used an Arduino Uno board for the purpose of programming the Atmega328p IC, i.e. for burning the code onto it. The code has been written in the Arduino integrated development environment (IDE), hence creating a "sketch". This IDE enables you to write and edit code, and then convert this code into instructions that can be given to the Arduino hardware. The instructions are thus transferred to the Arduino board (a process that is known as uploading).

As Arduino has an open-source platform, there is a surplus of information available on it. The latest Arduino Software Version is 1.8.1, which can be downloaded for free from the official Arduino website itself. It is compatible with Windows, Mac, Linux, etc [3].

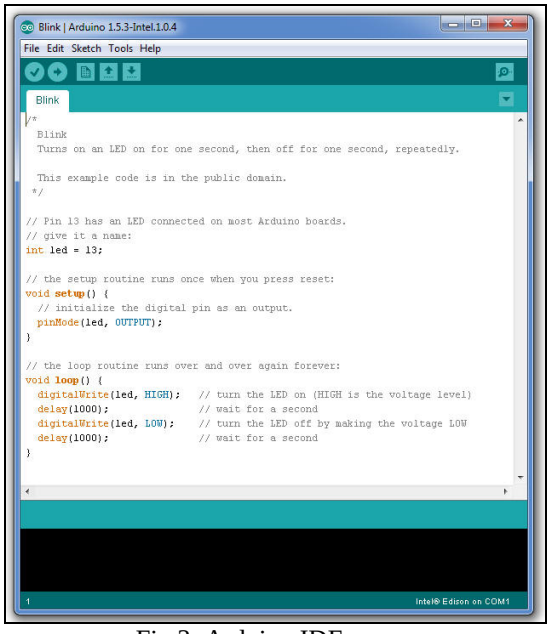

Fig.3. Arduino IDE

IV. SIMULATION AND TESTING

Software Testing

The system was tested, by simulating it and the result obtained showed the temperature was maintained above a certain range. We burnt the code on the Arduino Uno, which was used to program the Atmega328p, and then we used this programmed IC on the PCB board. When the temperature was less than 40 degree Celsius, the relay turned on and heating element also turned on, hence the lamp in the simulation glowed.

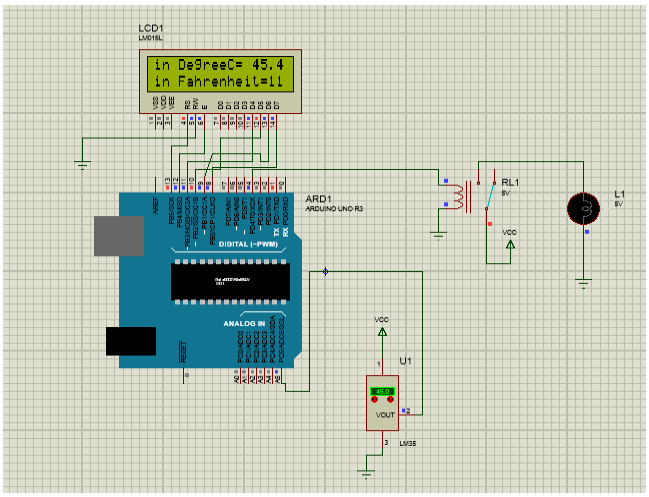

Fig.5. Lamp is off when temperature is greater than 40˚C

When the temperature reaches 40 degree Celsius, the relay turned off, turning off the heating element turned as well as the lamp.

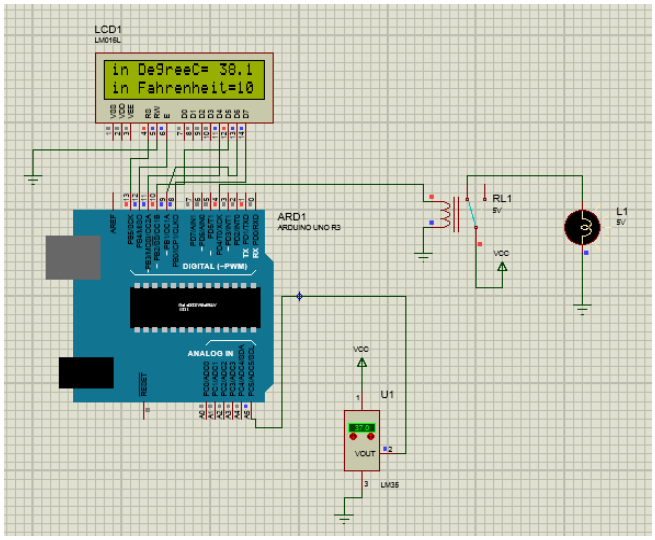

Fig.6. Lamp is on when temperature is less than 40˚C

Hardware Testing

The Relay Module, LM35 and the light bulb were connected. Initially, temperature inside the container was equal to the room temperature, hence the light bulb turned on.

The hardware was then tested by giving it power supply and hence turning on the system. Initially, temperature inside the container was equal to the room temperature, hence the light bulb turned on. The LM35 temperature sensor was held near the apparatus to measure the temperature, which was displayed on the LCD. After some time, as heat was generated by the light bulb, the temperature of the container had risen. When the temperature reached 40 degrees, the relay turned on, and hence the light bulb also turned on.

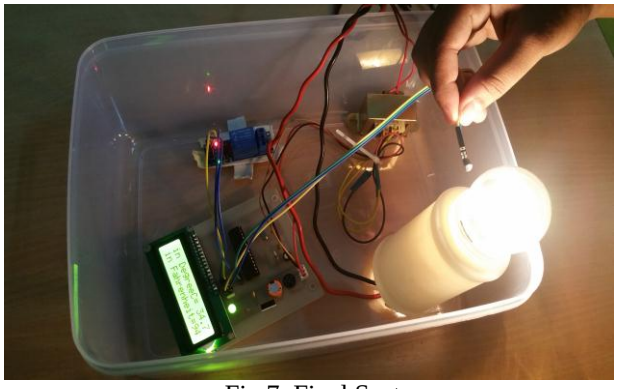

Fig.7. Final System

When the LM35 was held away from the bulb, which had turned off, it detected a lower temperature. When it detected a temperature that was below 40 degrees Celsius, the light bulb switched on again, hence heating up the box again. This demonstrated how temperature of the container could be maintained and controlled.

V. CONCLUSION

This project has a lot of prospective applications and scope for improvement in the future. For instance, it can be used as an everyday home appliance to keep food warm and fresh, just the way a refrigerator is used to keep food cool and to prevent it from going bad. It can be used in bakeries to keep bread warm, as well as in various industries. It can be used in homes to keep breads and various vegetables hot after preparing them. It can be further expanded with the help of IoT so that one can control it from anywhere, that is, a part of an application of a Smart Home.

REFERENCES

[1] J. Tsado, O. Chimdinma, O. Imoru, E. A. Yahaya, "A Microcontroller Based Food Temperature Regulating System," *International Journal of Engineering Research & Technology*, vol. 2, no. 11, November 2013

[2] A.L. Amoo, H. A. Guda, H. A. Sambo, T.L. G. Soh, "Design and Implementation of a Room Temperature Control System: Microcontroller-Based," presented at the IEEE Student Conference on Research and Development, Batu Ferringhi, Malaysia, April 2, 2015.

[3] Y. A. Badamasi, "The Working Principle of an Arduino," International Conference on Electronics, Computer and Computation (ICECCO), 2014

[4] *Importance of Temperature Controls in Food and Medical Industries.* The Green Book, 2012. Web. 20 February 2017. http://www.thegreenbook.com

[5] *LCD.* Engineers Garage, 2012. Web. 20 February 2017. http://www.engineersgarage.com

[6] Atmel, "8-bit AVR Microcontrollers", Atmega328p datasheet, November, 2016. Texas Instruments, "LM35 Precision Centrigrade Temperature Sensors", LM35, August 1999 [Revised August 2016]

